

ARMS WITH ADJUSTABLE LENGTH
250mm MIN - 600mm MAX

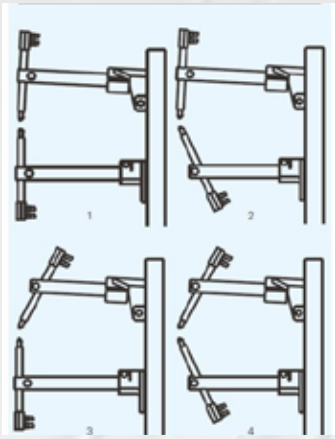

ARM CONFIGURATION



ZP



Z WITH MECHANICAL FOOT PEDAL



CONTROL WS 402

TECHNICAL SPECIFICATIONS		Z 18 ZP 18	Z 28 ZP 28
Single Phase Input	V 50/60 Hz	400	400
Rated Power @ 50%	kVA	15	25
Max. Welding Power	kVA	23	41.6
Installed Power	kVA	11	14
Fuse (Delayed Action)	A	32	40
Open Circuit Voltage	V	2.6	3.5
Secondary Short Circuit Current	kA	10.2	13.8
Max. Welding Current	kA	8.2	11
Electrode Force Max (6 Bar)	daN	220	220
Distance Between Arms	mm	215	215
Water Consumption	l/min	3.8	3.8
Dimensions	Depth mm	760	760
	Width mm	330	330
	Heigth mm	1200	1200
Weight	kg	104	118